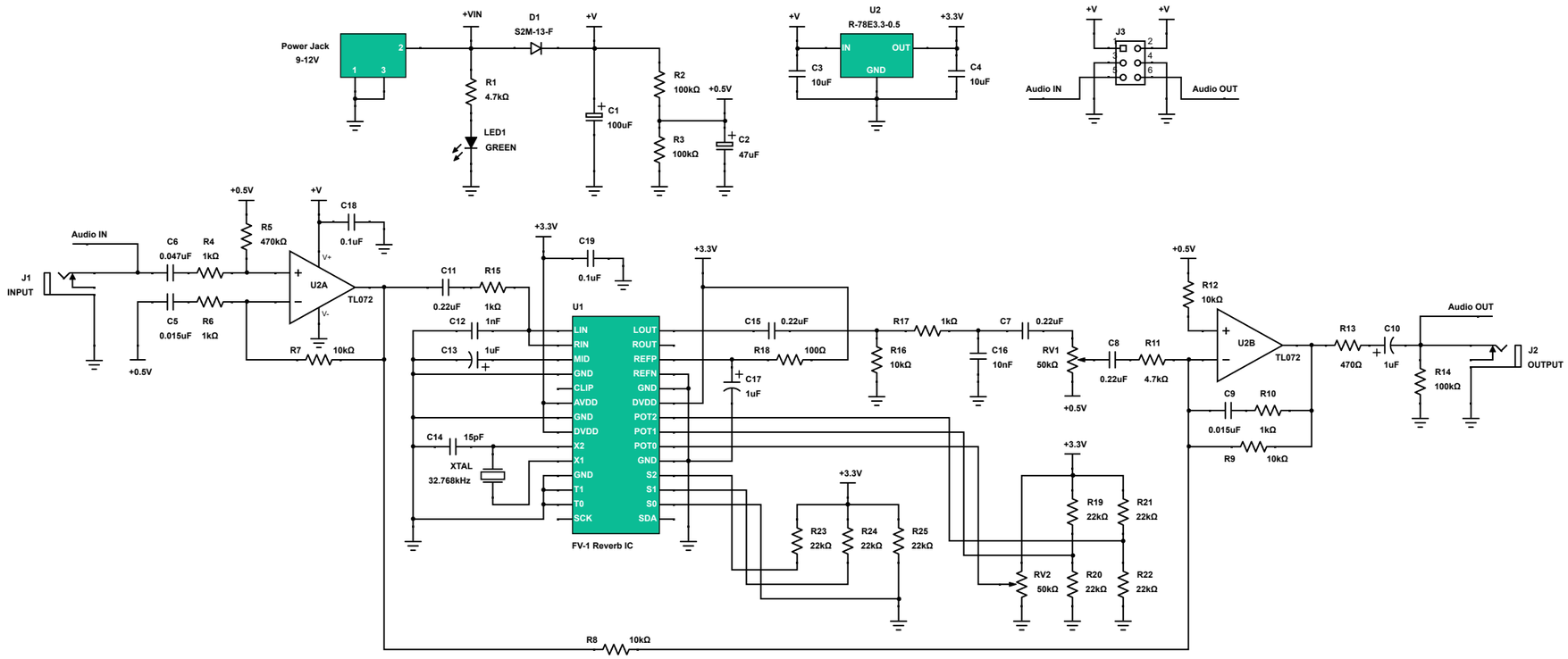
Power Jack
9-12V
+VIN
D1
S2M-13-F
+V
R1
4.7kΩ
LED1
GREEN
C1
100uF
R2
100kΩ
+0.5V
R3
100kΩ
C2
47uF
U2
R-78E3.3-0.5
IN
OUT
GND
C3
10uF
C4
10uF
+3.3V
J3
Audio IN
Audio OUT
J1
INPUT
C6
0.047uF
R4
1kΩ
C5
0.015uF
R6
1kΩ
R5
470kΩ
C18
0.1uF
U2A
TL072
V+
V-
R7
10kΩ
C11
0.22uF
R15
1kΩ
C12
1nF
C13
1uF
C19
0.1uF
U1
LIN
RIN
MID
GND
CLIP
AVDD
GND
DVDD
X2
X1
GND
T1
T0
SCK
LOUT
ROUT
REFP
REFN
GND
DVDD
POT2
POT1
POT0
GND
S2
S1
S0
SDA
FV-1 Reverb IC
C14
15pF
XTAL
32.768kHz
C15
0.22uF
R18
100Ω
C17
1uF
R17
1kΩ
R16
10kΩ
C7
0.22uF
C16
10nF
RV1
50kΩ
C8
0.22uF
R11
4.7kΩ
R12
10kΩ
U2B
TL072
C9
0.015uF
R10
1kΩ
R9
10kΩ
R13
470Ω
C10
1uF
R14
100kΩ
J2
OUTPUT
R23
22kΩ
R24
22kΩ
R25
22kΩ
R19
22kΩ
R21
22kΩ
RV2
50kΩ
R20
22kΩ
R22
22kΩ
R8
10kΩ